Operating Instructions
Parts List

hohner FAVORIT

Pad and Folder
Wire Stitching Machine

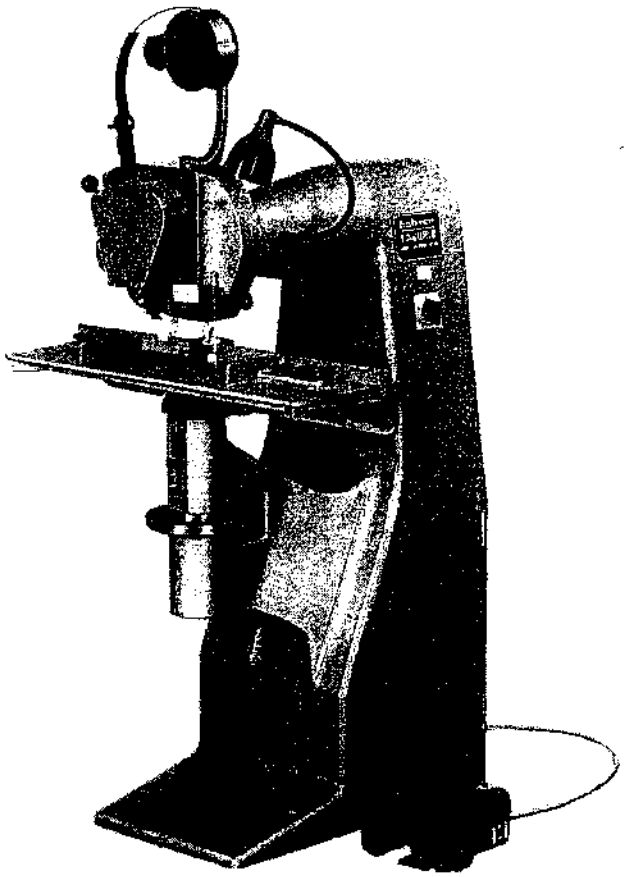

hohner Maschinenbau GmbH

Postfach 7
D-78501 Tuttlingen
Tel.: 07462/9468-0
Service: 07462/9468-23
Fax.: 07462/9468-20
Telex: 672675 mahoh d

edition january 1995

ATTENTION

Carefully read these instructions for use before operating the hohner pad and brochure stitching machine.

SAFETY ADVICE

1.) Before working with the machine, do not forget to read the hohner-instructions for use and observe all warning on the machine. The nonobservance of this prescription may lead to severe injuries.

2.) Do not operate the machine before all safety devices, locks and other security fixtures function or are set up.

3.) Before all repairs, cut off the current supply and set safety switch (main switch) to 0.

4.) Remaining risks: There is danger of injuring your hand or your fingers under the safety guard if there is no paper under the stitching head.

The user is responsible for the safe function of the machine at any times as well as for the observance of all prescriptions of these instructions for use by the operating person. For all questions regarding the safe operation of this machine, please, contact your senior officer or the hohner sales representative or

hohner Maschinenbau GmbH

Postfach 7
D-78501 Tuttlingen
Tel.: 07462/9468-0
Service: 07462/9468-23
Telefax: 07462/9468-20
Telex: 762 675 mahoh d

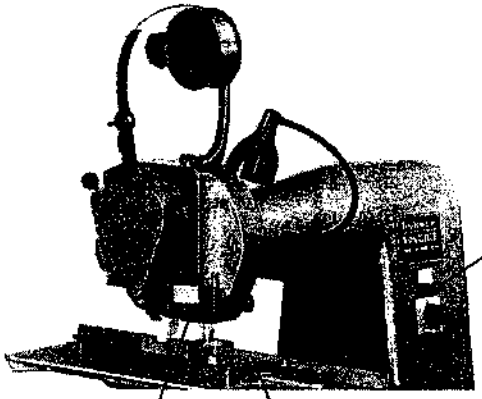
Main Switch
Safety Guard
Guiding Ruler

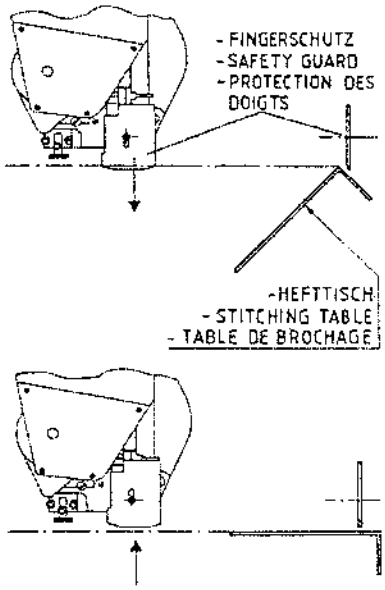
- FINGERSCHUTZ
- SAFETY GUARD
- PROTECTION DES DOIGTS
-HEFTTISCH
- STITCHING TABLE
- TABLE DE BROCHAGE

Preface

This booklet is divided into 7 parts:

I Basic Information and Instructions
(Paragraph 1 - 14)

II Operating Instructions
(Paragraph 15 - 23)

III Faults and their Correction
(Paragraph 24 - 46)

IV Complements
(Paragraph 47 - 56)

V Basic Plan

VI Current Schedule

VII List for Spare Parts

Before commencing work this booklet should be carefully read, paragraph by paragraph. If this is done with the machine in front of you, relating each instruction to the machine you will save both time and trouble and you will quickly master the necessary operational skill.

All the indications about the wire given in this booklet refer to the numbers and sizes generally used in Germany.

Paragraph No. 48 a complete comparative index of the German, British and US wire numbers and sizes.

Contents

Part I Basic Information and Instructions

1 General Technical Details
2 Accessories
3 Unpacking and Cleaning of the Machine
4 Setting up
5 Electrical Equipment and Connection
6 Lubrication
7 Stitching Wire - which thickness?
8 Stitching Wire - round or flat?
9 Coiled Stitching Wire - That´s what you order!
10 Stitching Wire Index
11 Setting the machine for the appropriate wire (2 sets of parts)
12 Exchanging of the two sets
13 Driver „with lip", part 3224
14 Round Cutter and Flat Cutter

Part II Operating Instructions

15 Setting the machine for stitching thickness (Level of table)
16 Setting the length of the stitching wire
17 Setting the table for pad-stitching
18 Setting the table for folder-stitching (saddle-like)
19 Threading the wire
20 Braking Leaf-Spring for the spool
21 Straightening the wire
22 Pad-stitching up to 40 mm (1 1/2") - Stopping the Clincher
23 Ejecting the staples out of the Clincher' s box

Part III Faults and their Correction

24 General hints
25 Worn out parts
26 Defects in the electrical equipment
27 Turning the machine by hand
28 Machine is suddenly locking
29 Sliding V-Belt prevents correct turning
30 A staple is caught in the Clincher's box
31 Clinchers are jamming, have no or insufficient upard stroke
32 Staple shanks are insufficiently bent
33 Staples are not complete
- one shank is shorter
- transporting wheels: how to regulate them
34 Staple is too short
35 Staple is too long
36 Ridge of the staple does not touch
37 Shanks of the staples do not prick
38 Ridge of the staple looped or buckled
39 Staple shanks are breaking
40 Wire goes to pieces
41 Knobs at the angles
42 Shanks are converging
43 Shanks are diverging
44 One shank is wrongly bent
45 One shank is sloping
46 Both shanks are sloping

Part IV Complements

47 Index of wire types
48 Loop-Stitching
49 Inserting the Benders and the Driver for loop-stitching
50 Removing the standart Tongue 3241
51 Assembling the Tongue 3715 for loop-stitching
52 Setting the stitching thickness for loop-stitching
53 Setting the length for loop-stitching
54 Setting the table and the angle cheeks for loop-stitching
55 Rechanging from loop-stitching to standart stitching
56 Special Oiling

Part I

Basic Information and Instructions

1. General technical Details

Stitching thickness: chenched	0 - 25 mm (0"-1")
stabbed up to	40 mm (1,5")
Stitching speed, infinitely variable:	160-225 staples p/min
Crown width:	14 mm (.55")
Shank length: in 12 equal degrees	6 - 29 mm (.236" to 1.142")
Size of the combined flat and saddle-like table:	700 x 240 mm (27 1/2" x 9 1/2")
Stitching wire: round	No. 21 - 30 (0,81 - 0,37 mm dia.) (.031 - .014" dia.)
flat	No. I - VI (0,75 x0,37 mm - 0,96 x 0,78 mm) (.030 x.014 to .038 x .031")
Motor: Standart execution:	0,25 kW, 1.400 r.p.m. for 230/400 volts, 3-phase A.C., 50 cycles. Other types of current, voltages, frequencies and tropical insulation can be supplied an extra charge.
Loutnes:	Not over 82 dB (A)
Space required without the operator:	78 cm deep x 70 cm wide (30,7 x 27,6")
Floor space:	63 x 36 cm (24,8 x 14,2")
Working hight:	88 cm (35")
Total hight:	148 cm (58,27")
Net weight:	approx. 280 kg (595,88 lbs)
Gross weight:	approx. 370 kg (815,88 lbs)
Size of case:	86 x 76 x 140 cm (33,9 x 30 x 55,12")

2. Accessories

Every new **FAVORIT** is supplied with:

Equipment

1 Pedal switch 4300068
1 Working lamp 4300046
1 set of parts for wire 26-30:
1 Bender right 3103226
1 Bender left 3103225
1 Driver 3103227
0·5
(the 1. set ist already mounted for wires 21-26 or VI -I)

1 Driver „with lip" 3103224

Tools

1 Oil Press
1 Screw driver 5 mm (3/16") 4600004
1 Screw driver 8,5 mm (5/16") 4600005
1 Six-edged bos spanner 24 mm 4600015
1 Allen-key SW 2 mm 4600006
1 Allen-key SW 8 mm 4600011
1 Side-nippers 4600014
1 Handle-bar 8 mm (5,16") for the table regulating handwheel

Spare Parts

1 Gripper 3303235
1 Lever for gripper 3303318
1 Round cutter 3203388
1 Flat cutter 3203425
1 Pair of Clinchers 9403650
1 Push rod 3103412
1 Pressing spring for gripper 3903422
2 Flat-head screws M4 x 8 DIN 963 (for driver & flat cutter) 7604008
4 Cylindrical screws with slot (M5 x 12 DIN 84)(for bender) 7205012

3. Setting up

After having unpacked the machine it must be thoroughly cleaned. Strip off the rustproof coating and grease. If necessary, unscrew bender, clincher, driver and flat cutter, clean them in washingbenzine, oil them and refit them again.

4. Setting up

Floor must be flat, the machinesecure and levelled.

5. Electrical equipment and connection

Generally the **FAVORIT** is supplied with a motor of 0,33 h. p. 1400 rpm. for 230/400 volts, 3-phase A.C., 50 cycles. Other types of current, voltages, frequencies and tropical insulation can be supplied at an extra charge and must be specially ordered.
On the name plate of the machine are shown voltage and frequency.
The machine should be set up by a qualified electrican. He ought to read the following and observe instruction illustriaded in Fig. 1 in the connection box of the machine.

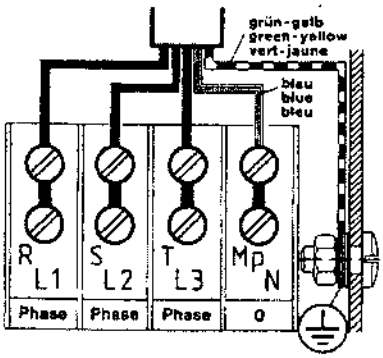

Fig. 1 Schedule of the connection

Observe the direction of the rotation of the pper V-belt pulley marked by an arrow. Direction can be reversed by exchanging two phases in the connection box. (Do not mistake the neutral conductor for a phase)!

According to the lates regulations for electrical installations in Germany (VDE-Regulations) the safety-conductor is coded „green-yellow", throughout the machine.

The neutral conductor ist blue. When working, however, e. g. at the main switch, please note, that the feed cable for the 3-phase motor contains the blue conductor connecteg with a phase.

Changing over the machine from triangle to star connection or vice-versa, one has - besides the work with the terminal box - to change the connection to the transformer in the main switch.

6. Lubrication (Fig. 4 + 5)

The whole machine has to be oiled except one point only, namely the regulating V-belt pulley on the motor shaft. You will find an oil can among the tools.

Apply a first-rate oil, not a viscous mineral oil, nor a light oil for sewing machines.
Oiling - how often? After every 16th working hour!

From time to time slightly oil the spindles, rollers and the felt pad on the spring bow wire feed.

Please observe all these regulations carefully. If grease is applied instead of oil it will block all the supply pipes. Oiling will be useless afterwards. To correct such a mistake you must clean the machine thoroughly, no grease residual may remain.

On the whole, a clean machine is not only a delight for the eye but also guarantees a faultless job.

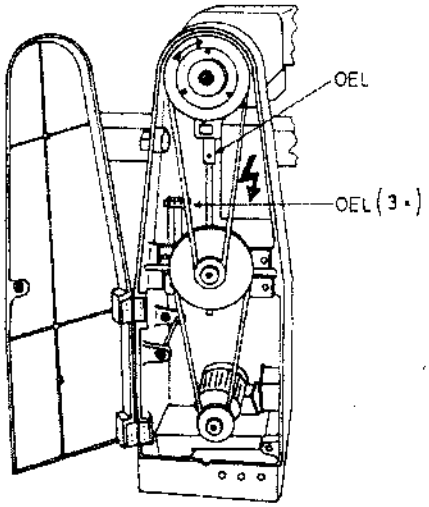

Fig. 4

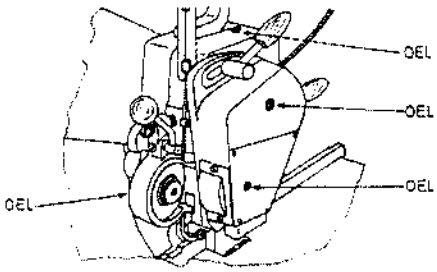

Fig. 5

7. Stitching wire - which thickness?

The **FAVORIT** processes stitching wire of standart quality:
round No. 21 - 30 (0,81 - 0,37 mm dia. / . 031 - .014" dia.) and
flat No. I - VI (0,75 x 0,37 mm - 0,96 x 0,78 mm / .030 x .014 to .038 x .031")

Thumb Rule: The thicker the material to be stitched, the thicker the wire, but not more necessary. A wire, a bit too thick only offends the aspect, but a wire, a bit too thin will cause mistakes!

8. Stitching wire - round or flat?

Very thin folders of a few sheets only, are usually stitched with round wire No. 30 or No. 28. It will be a matter of experience and economy to choose either round or flat wire (round wire is cheaper). Pads of 18 mm (.70") thickness can be stitched with both round and flat wire. More than 18 mm (.70") require flat wire; beginning from 20 mm (.79") you ought to use steel wire (no special steel quality such as „steel special"", or „steel extra hard") just ask for standart steel wire!

9. Coiled stitching wire - That's what you order!

The wire is standardized and can be ordered at every printer's and bookbinder's supplier or directly from stitching wire manufacturers.

You order: First rate stitching wire, 2 kg ea. (approx. 5 ibs.) weight, suitable for detachtable spools (bright, coppered, tinned, zinked, etc.) No. ..... round / flat.. According to index No. 48, depending on the thickness and hardness of the material to be stitched. They are available up to 6 kg (151 ibs.).Further it will be possible to equip the machine with a special device for wire barrel windings; detailed information is required if this is to be supplied.

Sheets metal spools containing 2 kg (5ibs.) or more of wire are also frequently used. (A number of suppliers lend such spool against small fees). Recently there are disposable plastik spools to be thrown away after use.

10. Stitching Wire Index

Heftdicke ab ca.	bis ca.	Runddraht Nr.	Flachdraht Nr.
2 Blatt	1 mm	30	-
2 Blatt	2 mm	28	-
2 mm	6 mm	25	-
6 mm	10 mm	23	III
10 mm	14 mm	22	IV
14 mm	18 mm	21	V
18 mm	25 mm	-	VI

It is totally unnecessary to keep all sorts of wire in stock. The 8 types noted in the detailed comparative index ought to be sufficient.
Occasionally you might need a stronger sort of wire, e. g. when working withvery hard paper or in case of blunt cutters, which weaken the driving power of the staples.

Part II

Operating Instructions

15. Setting the stitching thickness (level of table)

The level of the table must correspond with the thickness of the material to be stitched:

a.) thick paper pile = table down
b.) thin paper pile = table up

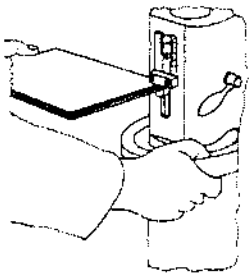

Fig. 11

Loosen the locking handle above the handwheel, turn the handwheel till the two gauge blocks grip the pad or the open pamphlet. Now the table has got the approximate height. After that prepare all others necessary operations for stitching. The first test will show you weither you have to raise or lower the table. Don't forget to tighten the locking handle afterward again!

The right scale will show you the thickness of the pamphlet in millimeters and is meat as a guide mark or reference ponter. Equal jobs require equal measure, so you are saving time without measuring beforehand.

16. Setting the Length of the stitching wire

The thickness of the folder or pad determines the required lenght of the staples:

a.) thick material = long wire
high mark on the setting case

b.) thin material = short wire
low mark on the setting case

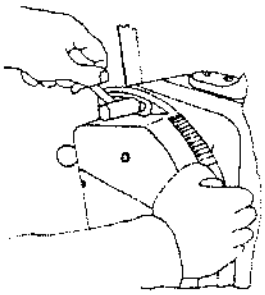

Fig. 12

After having set the table lever (paragraph15) read the length of the wire (1-12) on the left scale above the handwheel. Now, you can turn the setting case for wire length - after having loosened the fixing screw - to the stated number and tighten the fixing screw afterwards (see left hand of the operator on Fig. 12).

The setting case must exactly meet a graduation mark, even if the left graduation mark at the gauge blocks lies between two numbers, otherwise the shanks will be of different lenght. The graduation is only an additional help for setting.

17. Setting the table for Pad stitching

The setting of the table level as well as of the wire length refers to the thickness of the material to be stitched, each effect, however, is independent from oneanother (therefore, the table level has nothing to do with the wire (lenght)! In case of getting to long or too short staples one has to correct the setting case for the next higher or lower degree.
(see paragraph 35 and 36)

When changing the wire length, switch off the wire transport (eccentric bolt with ball handle 3348 on the left side of the stitching head). Lever down!

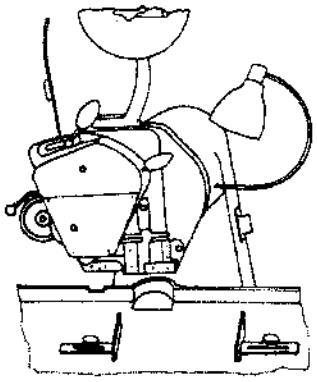

Fig. 13

The table is level, the guiding ruler 3503670 perhaps also the laterally adjustable bevels 3603678 and 3603679 are screwed on.

18. Setting the table for Folder Stitching

The table must be set oblique (saddle-like):

a.) Unscrew guiding ruler 3503670 and lateral bevels 3603678 and 3603679, otherwise the finger guard will break.

b.) Hold the table with your left hand, whilst your right hand is pulling the stop handle 3503416. Now bring the table into saddle position.

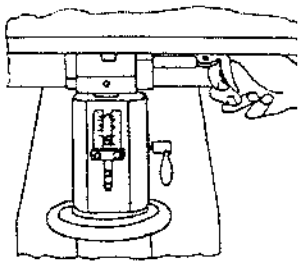

Fig. 14

19. Threading the wire

Switch off the wire transport (lever with ball handle downwards); put the spool on its holder. Draw downwards the wire and thread as follows:

..... through the loop of the spring bow of the wire guide 3803450, through the felt pad, through either part of wire-guide tube, between the two transporting wheels (3203343 and 3203346), through the roller-straightener 940331, finally through the tube-straightener 3203352 (last slot for the wire with a knurled strap at the front side).
Then push the wire slightly forward.

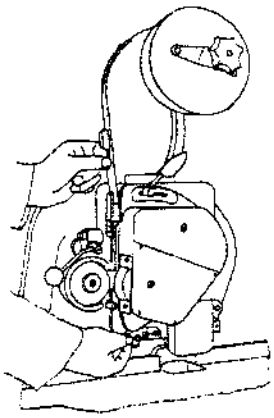

Fig. 15

Switch on the motor and push the treadle, switch several times, until getting the first usable staple. To catch the waste wire put some sheets of paper under the stitching head.

20. Braking leaf spring for the spool

Brake the spool by means of the leaf spring turning the star handle 3703431 so that the wire has a free play, whereas the spool does not continue running. Otherwise the coil will be loosened and becomes spoiled.

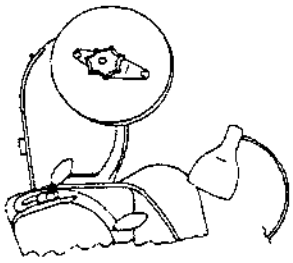

Fig. 16

21. Straightening of the wire

The wire in the coil is deformed; it must however be straight for stitching.
This is effected by the roller-straightener 32033352. Do not turn these devices when the machine is working correctly.

Whether the wire needs straightening will be seen by the following results:

a.) The wire is forming loops, between the roller and the tube-straightener, it does not run, but has somewhere an obstruction;

b.) Only wire bits are produced instead of staples, consequently the wire is missing the former 9903234;

c.) Both shanks are sloping or one is bent inwards, whereas the other is bent outwards; the wire is gripped by one side of the gripper 3303235 only;

d.) The shanks are converging or diverging when pads are too thick.

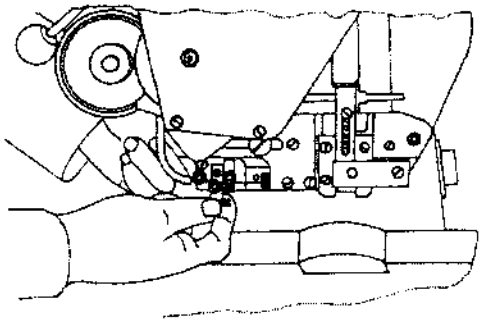

Fig. 17 Roller - Straightener

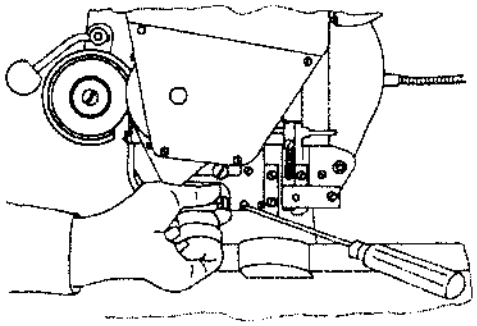

Fig. 18 Tube - Straightener

Try to correct the trouble by a slight turning of the regulating screw 3203315 of the roller-straightener and if useless, turn the tube-straightener is curved inside and changes the direction of the wire in any position.

Should these efforts prove in effective take off finger-guard, wire guide and former. Slowly run the machine and you will see whether the wire is being transported bent or straight.

The running wire, not being exactly horizontal, must be corrected by slowly running machine, regulary either the roller or the tube-straightener until getting a straight wire. Tighten the fixing screw and assemble the parts again.

22. Pad stitching up to 40 mm (1 1/2"), when staples are inserted from both sides (by stabbing); Stopping the clinchers (Fig. 19 + 20)

Fig. 19

The machine stitches by clenching up to a thickness of 25 mm (1") up to 40 mm (1 1/2"), however by stabbing; but the staples must not penetrate the pad. The clinchers do not work when stabbing, therefore shift them off (Fig. 20): Turn the handle aside by 90°, until it will snap in.

23. Ejecting the staples out of the clincher's box

The same handle (Fig. 20) will effect the ejecting of the staples or of wire bits out of the clinchers' box, sometimes jammed there in: give the handle a sudden and strong pull to overcome the hard pressure of the spring.

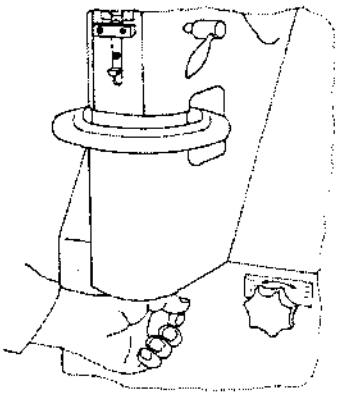

Fig. 20
a) to stop the clinchers: turn it aside
b) to eject the staples or wire bits from the clinchers' box: sudden srong pull

Part III

Faults and their correction

24. General hints

In the instructions below you will find some examples of faults, their causes and their correction. There are often different reasons which have to be investigated step by step. Do not apply all suggestions simultaneously, but one after the other making tests in between.

25. Worn out parts

Exchange them in time. Repairs are more eypensive and less reliable.

26. Defects in the electrical equipment

These must be repaired by an electrician only. (see paragraph 5)

27. Turning the machine by hand

By means of the six-edged box spanner SW 8 mm (5 /16"). Put the spanner into the inside six-edged nut of the upper driving pulley. Now you may use it as a crank, but switch off the motor beforehand.

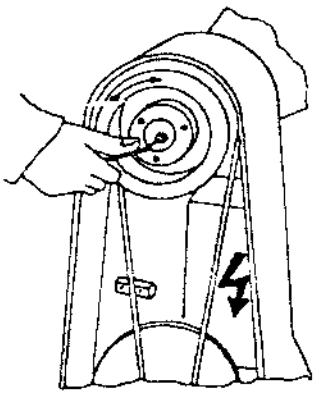

Fig. 21

28. The machine is suddenly locking, during stitching or wire-straightening:

Control if a piece of wire or a staple has jammed between or behind the movable parts of the stitching head. Unscrew finger guard, wire guide 3103272, former 9903234, bender and driver. If however the misdoer has fallen between or behind the fixed parts, try to get it by means of a pair of flatpliers. Turning the driving shaft by hand will help you.

29. Sliding V-belt prevents correct turning

First put down the upper V-belt, then the lower V-belt from the V-belt pulley in the middle.
Loosen with a screwdriver the headless screw at the setting-ring. Remove the settingring and the V-belt pulley from the axle.

Stretch the V-belt! Loosen the two inside six-edged nuts of the reduction gear. Press it down to stretch the belt. Tighten the screw again. The fitting of the V-belt pulley and of the setting-ring happens in the opposite sequence.

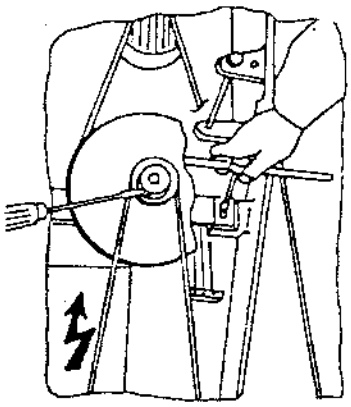

Fig. 22

30. A staple is caught in the clinchers' box:

31. Clinchers are jamming, have no or insufficient upward stroke:

Give the handle under the bearing case of the table spindle a sudden and strong pull and repeat it several times (Fig. 23)

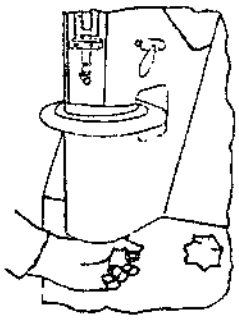

Fig. 23

32. Staple shanks are insufficient bent

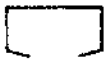

a.) Stitching pressure too weak!
Set table higher.

b.) Clinchers do not get their, clumination, although clinchers' box clean: Set the adjusting screw in the bearing case of the table spindle. It is locked by a safety nut M 16 x 1,5 mm, loosen it by the six-edged box spanner SW 24 mm (Fig. 24). Turn slotted screw slightly clockwise (Fig. 25). Tighten the nut again.

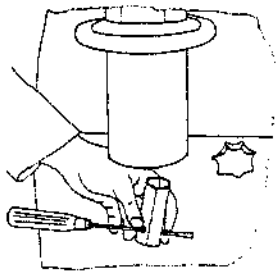

Fig. 24

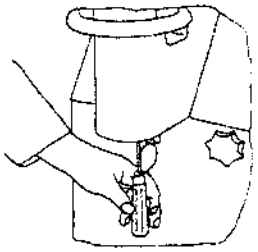

Fig. 25

33. Staples are not complete: One shank is shorter:

a.) Coil is braked too tightly or wire has jammed.
b.) Transporting wheels 3203343 and 3203345 are insufficiently pressed against one another: Regulate it! (Fig. 26)
c.) Setting case for length of wire (front side of the stitching head) does not meet the graduation mark.
d.) Cutters are blunt, wire is only indented and the former tears it off when bending.
e.) With round stitching wire No. 30: Wire must be sufficiently stretched, tighten braking spring on the spool and setting screw of the straightener 9403311 slightly.

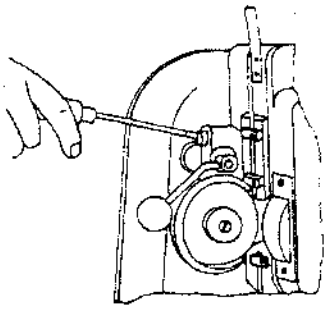

Fig. 26

34. Staple is too short, ist ends cannot be bent

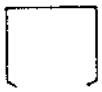

Either the pressing is too loose (table higher) or the setting case for length of wire must be turned to the next mark.

35. Staple is too long

Setting case for length of wire - one mark backwards.

36. Ridge of the staple does not touch, is saddle-shaped

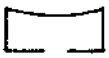

a.) Weak pressure, - table higher!
b.) Wire too weak or too soft.
c.) Change standard driver for the one „with lip".

37. Shanks of the staples do not prick upset and are lying flat

a.) Wire too soft or too weak.
b.) Cutters are blunt

38. Ridge of the staple looped or buckled, shanks do not prick the pad

The wire is too soft.

39. Staple shanks are breaking

Wire is too brittle, try another kind of wire.

40. Wire goes to pieces

Former is perhaps blocked by bits of wire. Take out the former and clean it, remove wire bits.

41. Knobs at an angle of the staple

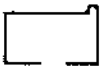

Driver may be broken out an that side, fit in a new driver.

42. Shanks are converging

a.) Straighten the wire (paragr. 22)
b.) Examine the cutter

43. Shanks are diverging

a.) Straighten the wire (paragr. 22)
b.) Examine the cutter

44. One shank is wrongly bent

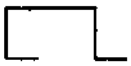

Straighten the wire (paragr. 22)

45. One shank is sloping

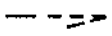

Straighten the wire (paragr. 22)
Use clincher 9403650

46. Both shanks are sloping

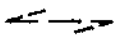

Straighten the wire (paragr. 22)
Use clicher 9403650

Part IV

Supplements

for operating instructions **hohner**-Pad and Folder Wire Stitcher
FAVORIT

47. Loop - Stitching

Loop-stitching is employed for folders, stitching through the fold and shaping a loop of the wire on the back. When filing you avoid punch-holes and thus the folder will not be damaged. Therefore, more and more clients prefer loop-stitching for their records, hanging and other purposes.

The **FAVORIT** solves the problem easily. You require these parts below:

a.) Out of the standard accessories supplied with each machine:

1 bender 3103225
1 bender 3103226
1 angle cheek (on the left side of the table)
1 angle cheek (on the right side of the table)

b.) Special Parts (against advance):
1 set of parts for loop-stitching consisting of:

1 driver	3103718
1 tongue	9403715
1 threaded ring tool M 4	3203716
1 hold	3334547

(The shaft of the tongue, shown in Fig. 28, is a standard shaft).

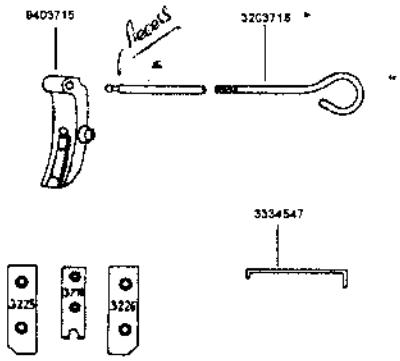

Fig. 28 Parts for Loop Stitch

Machines built up to 1968 incl.
These machines have to get 2 bore-holes at the stitching head and some bore-holes in the table surface for the above mentioned angle-cheeks. It has to be done by a skilled mechanician.

Machines built from 1969
are prepared to employ those change parts for loop stitching. They have to be removed for standard work.

Wire to be applied for loop stitching:
No. 26 (German) resp. 25 (British and US).

48. Inserting the benders and the driver for loop stitching

1.) Screw up the benders 3103225 and 3103226 as well as the driver 3103718.
2.) Table down to the lowest position.
3.) Switch off wire transport and turn setting case for wire length to graduation mark 12.
4.) Disengage the motor and turn the machine by hand by means of the six-edged box spanner SW 8 mm (Fig. 21, Part III Operating Instr.) until the benders 3103225 and 3103226 are in their lowest position, whereas the tongue 9403241 is protruding between the 2 benders. The driver 3103718 is sitting above the tongue.

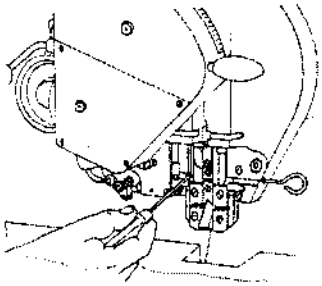

Fig. 30

49. Removing the standard tongue 9403241

1.) The set screw above the bender 3103225 must be unscrewed to get the shaft of the tongue free. (Fig. 30)
2.) Screw the threaded ring tool M4 3203716 into the bore-hole on the right edge of the stitching head as deep as possible to catch the shaft of the tongue. (Fig. 30) Pull the shaft out to the hole.
3.) Relieve the roller slide (use hold 34547), see Fig. 32.

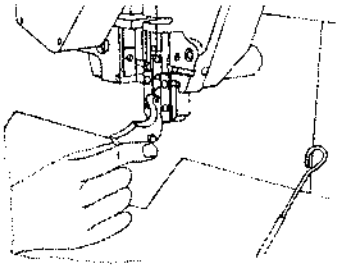

Fig. 31

50. Assembling the tongue 9403715 for loop-stitching

1.) Put in the loop tongue 9403715 from below. Peeping through the bore-hole on the right edge of the stitching head you can adjust bore-holes of head and tongue push the tongue shaft through the hole as deep as possible by means of the tool M 4 3203716, being still in connection with this shaft.

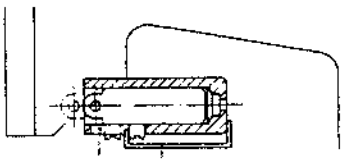

Fig. 32

2.) Retighten the set screw above the bender 3103225 and remove the ring tool M4 3203716 and hold 3334547.

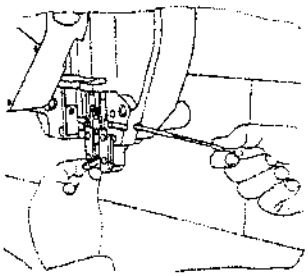

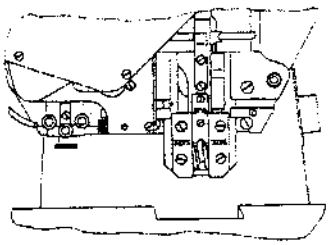

51. Setting the stitching thickness for loop stitching
(table position)

Equal to standard folder stitching (see paragr. 15).

52. Setting wire length for loop stitching

For normal stitching graduation mark 3, for thick folders mark 4.

53. Setting the table and the angle cheeks for loop stitching

We explain the procedure by means of an example:

A folder has to be stitched with two loops, distance 80 mm (measured from middle to middle of the loops).

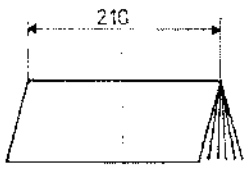

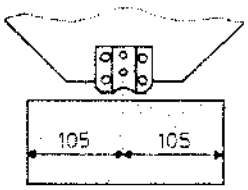

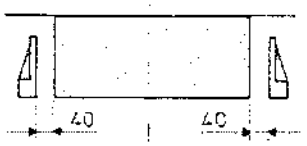

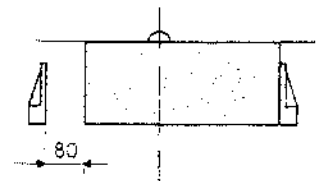

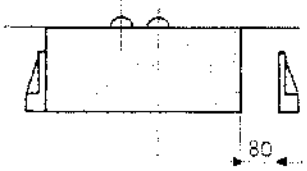

1.) The length of the folder is 210 mm; locate the middle of the back edge with a division mark, i. e. at 105 mm.

2.) The folder is to be put on the tilted table, so that the middle of the driver and the divison mark of the folder exactly coincide.

3.) Fix the right and left angle cheek on either side of the folder with a distance of 40 mm, the long legs of the cheeks upright!

4.) The folder is stitched, pushing it first to the right, afterwards to the left cheek. The distance of 80 mm measured from the upper resp. under edge of the folder, corresponds to the distance between the two loops (middle to middle).

Note:

Examine the equal length of the folders before stitching!
Control distance and execution by means of a specimen folder!
Tighten the screws of the cheeks carefully, to avoid differences of stitching distance.

54. Rechanging from the loop to standard stitching

Keep the benders and the driver required as well as the tongue 9403241 ready for use. (See paragr. 11)

Assembling in an analogous way as described in paragr. 50 to 52 for loop stitching.

55. Special oiling

After 8 hours loop stitching oil the roller slide 9403322 slightly through the opening of part No. 3503321. (Fig. 35)

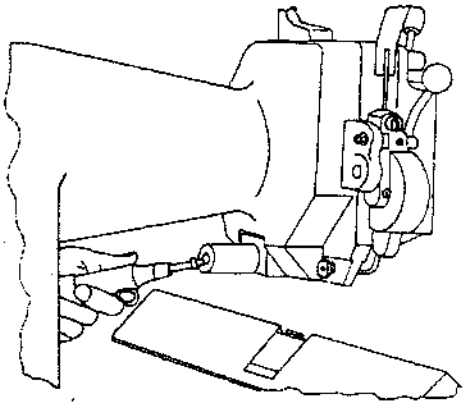

Fig. 35

V Basic plan

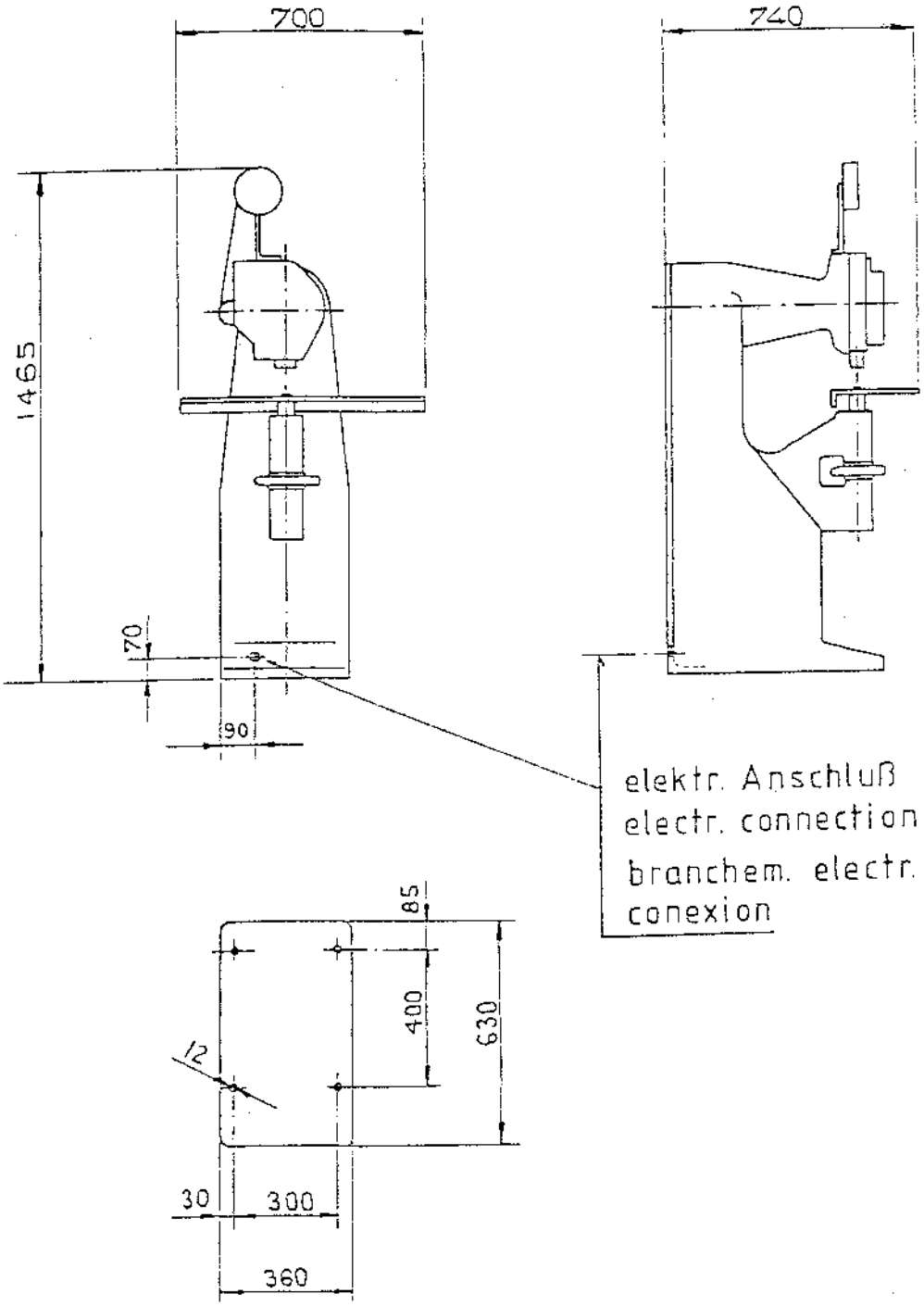

Maße in
Measurements in
Mesures en
Medidas in
} mm

Maßstab
Scale
Echelle
Imagen a escala
} M 1:20

Schaltplan / current shedule / schema des circuits

Favorit 230 V / 1 Phasen AC 50/60Hz 43 03010

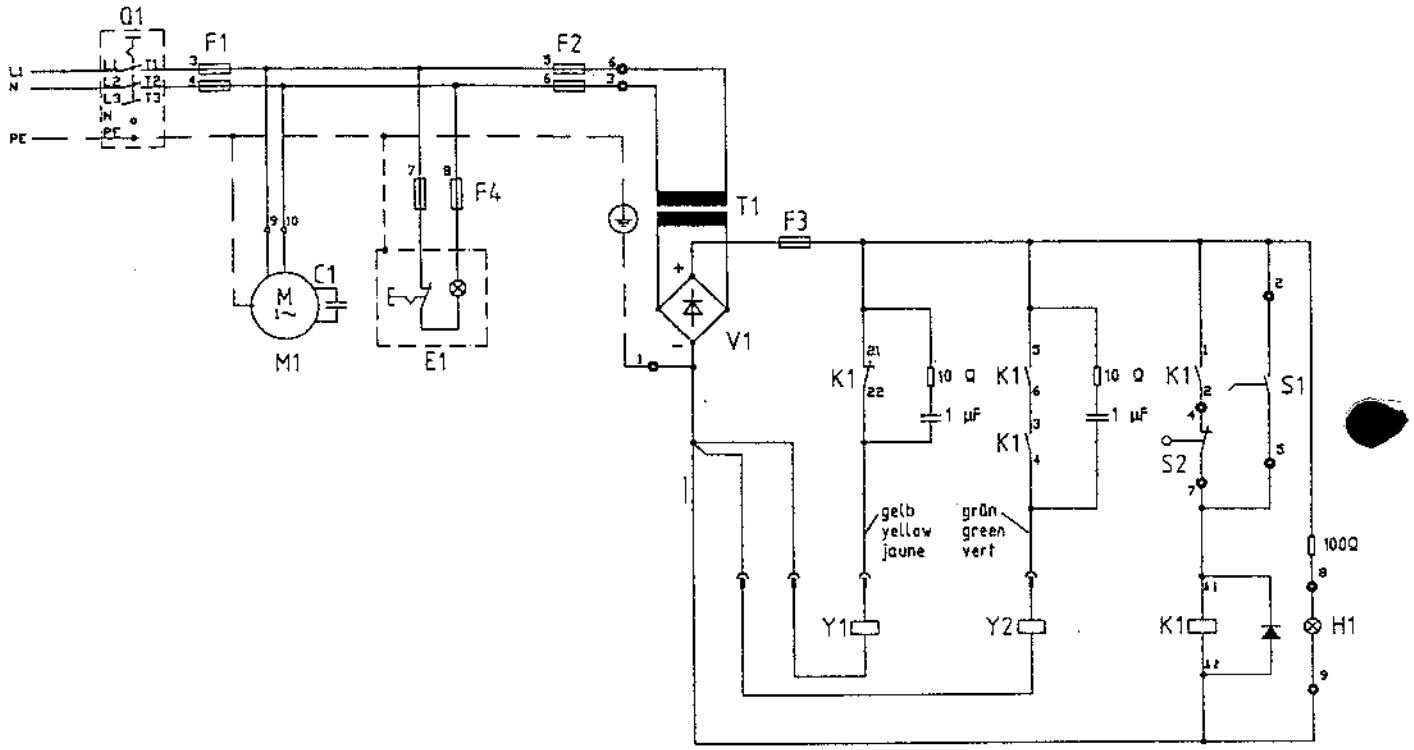

	deutsch	english	fransais
Q1	Hauptschalter/	main switch/	interrupteur principal
	Not-Aus-Schalter	emergency switch	interrupteur d' urgence
S1	Fußschalter	pedal switch	commande a pedale
S2	Endschalter	micro switch	interrupteur de fin de course
K1	Steuerschütz	control circuit	contacteur de commande
F1	Sicherungen-Haupt-	safety fuses-	fusibles de securite-
	stromkreis T6,3 A	main circuit T6,3 A	circuit principal T6,3 A
F2	Sicherungen-	safety fuses-trans-	fusibles de securite trans-
	Trafo pri. T5 A	former prim. T5 A	formateur, prim. T5 A
F3	Sicherung-	safety fuses-trans-	fusible de securite trans-
	Trafo sek. T2,5 A	former seco. T2,5 A	formateur, seco. T2,5 A
F4	Sicherungen	safety fuses	fusibles de securite
	E1 T2,0 A		
H1	Leuchtmelder	signal lamp	lampe de signalisation
E1	Arbeitsplatzleuchte	workstation lamp	lampe de place travail
M1	Motor	motor	moteur
T1	Trafo	transformer	transformateur
Y1	Bremse	brake	frein
Y2	Kupplung	clutch	embrayage
V1	Gleichrichter	rectifier	redresseur courant
C1	Kondensator	condenser	condensateur
●	AMP-Stiftverbindung	AMP-bolt connection	AMP-goupille combinaison
	Buchsenverb. (1-9)	sleeve connection (1-9)	douille combinaison (1-9)

Schaltplan / current shedule / schema des circuits

Favorit 230 V / 3 Phasen AC △ 50/60Hz 43 03011

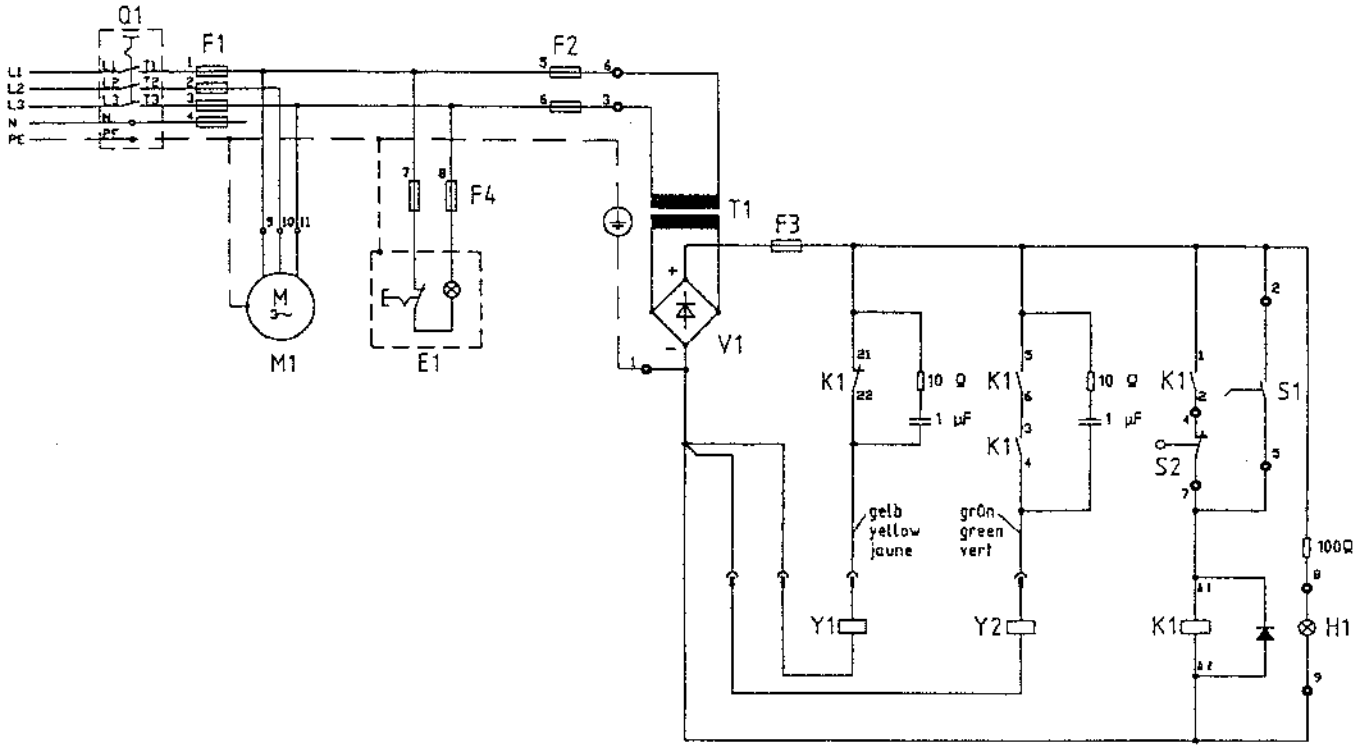

	deutsch	english	fransais
Q1	Hauptschalter/ Not-Aus-Schalter	main switch/ emergency switch	interrupteur principal interrupteur d' urgence
S1	Fußschalter	pedal switch	commande a pedale
S2	Endschalter	micro switch	interrupteur de fin de course
K1	Steuerschütz	control circuit	contacteur de commande
F1	Sicherungen-Hauptstromkreis T6,3 A	safety fuses-main circuit T6,3 A	fusibles de securite-circuit principal T6,3 A
F2	Sicherungen-Trafo pri. T5 A	safety fuses-transformer prim. T5 A	fusibles de securite transformateur, prim. T5 A
F3	Sicherung-Trafo sek. T2,5 A	safety fuses-transformer seco. T2,5 A	fusible de securite transformateur, seco. T2,5 A
F4	Sicherungen E1 T2,0 A	safety fuses	fusibles de securite
H1	Leuchtmelder	signal lamp	lampe de signalisation
E1	Arbeitsplatzleuchte	workstation lamp	lampe de place travail
M1	Motor	motor	moteur
T1	Trafo	transformer	transformateur
Y1	Bremse	brake	frein
Y2	Kupplung	clutch	embrayage
V1	Gleichrichter	rectifier	redresseur courant
●	AMP-Stiftverbindung Buchsenverb. (1-9)	AMP-bolt connection sleeve connection (1-9)	AMP-goupille combinaison douille combinaison (1-9)

Schaltplan / current shedule / schema des circuits

Favorit 400 V / 3 Phasen AC Y 50/60Hz 43 03012

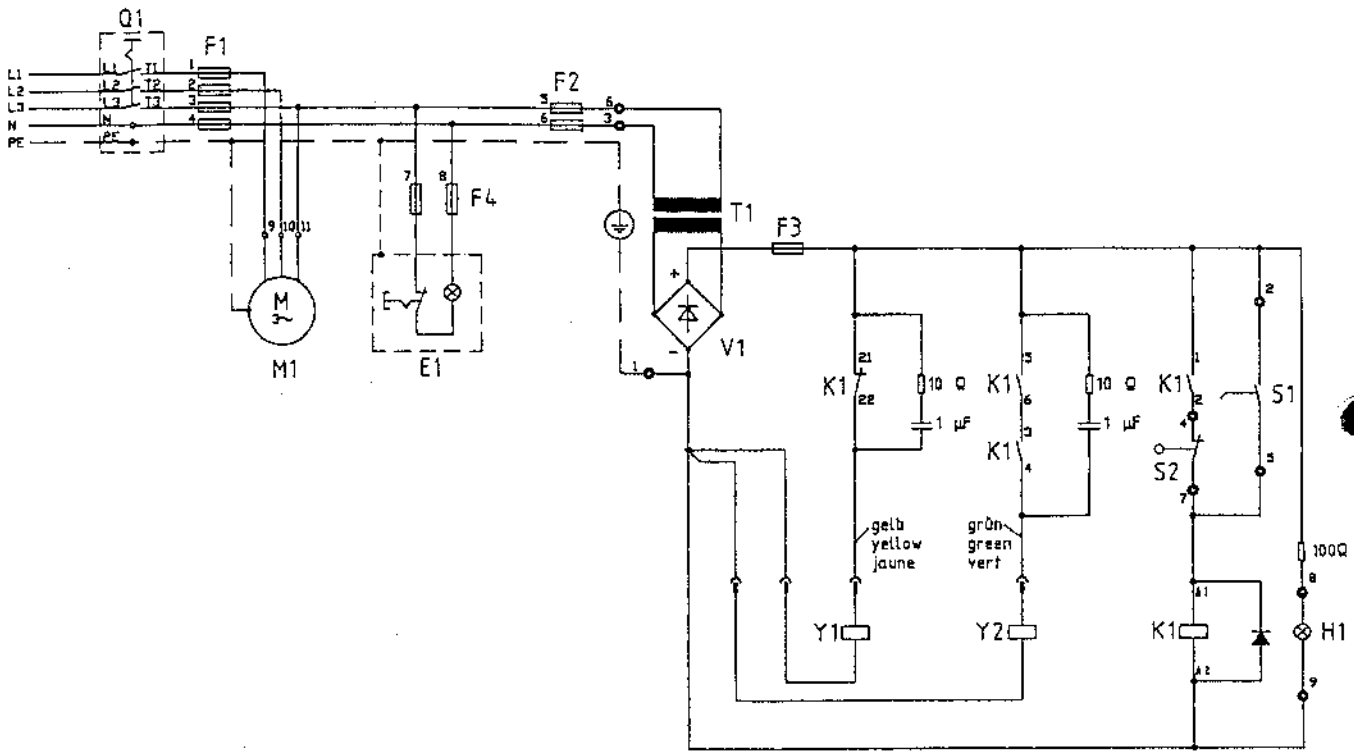

	deutsch	english	fransais
Q1	Hauptschalter/ Not-Aus-Schalter	main switch/ emergency switch	interrupteur principal interrupteur d' urgence
S1	Fußschalter	pedal switch	commande a pedale
S2	Endschalter	micro switch	interrupteur de fin de course
K1	Steuerschütz	control circuit	contacteur de commande
F1	Sicherungen-Hauptstromkreis T6,3 A	safety fuses-main circuit T6,3 A	fusibles de securite-circuit principal T6,3 A
F2	Sicherungen-Trafo pri. T5 A	safety fuses-transformer prim. T5 A	fusibles de securite transformateur, prim. T5 A
F3	Sicherung-Trafo sek. T2,5 A	safety fuses-transformer seco. T2,5 A	fusible de securite transformateur, seco. T2,5 A
F4	Sicherungen E1 T2,0 A	safety fuses	fusibles de securite
H1	Leuchtmelder	signal lamp	lampe de signalisation
E1	Arbeitsplatzleuchte	workstation lamp	lampe de place travail
M1	Motor	motor	moteur
T1	Trafo	transformer	transformateur
Y1	Bremse	brake	frein
Y2	Kupplung	clutch	embrayage
V1	Gleichrichter	rectifier	redresseur courant
●	AMP-Stiftverbindung Buchsenverb. (1-9)	AMP-bolt connection sleeve connection (1-9)	AMP-goupille combinaison douille combinaison (1-9)

hohner FAVORIT

ERSATZTEILLISTE
LIST FOR SPARE PARTS
LISTE DES PIECES DE RECHANGE
LISTA DE PIEZAS DE REPUESTO

HEFTKOPFPLATTE

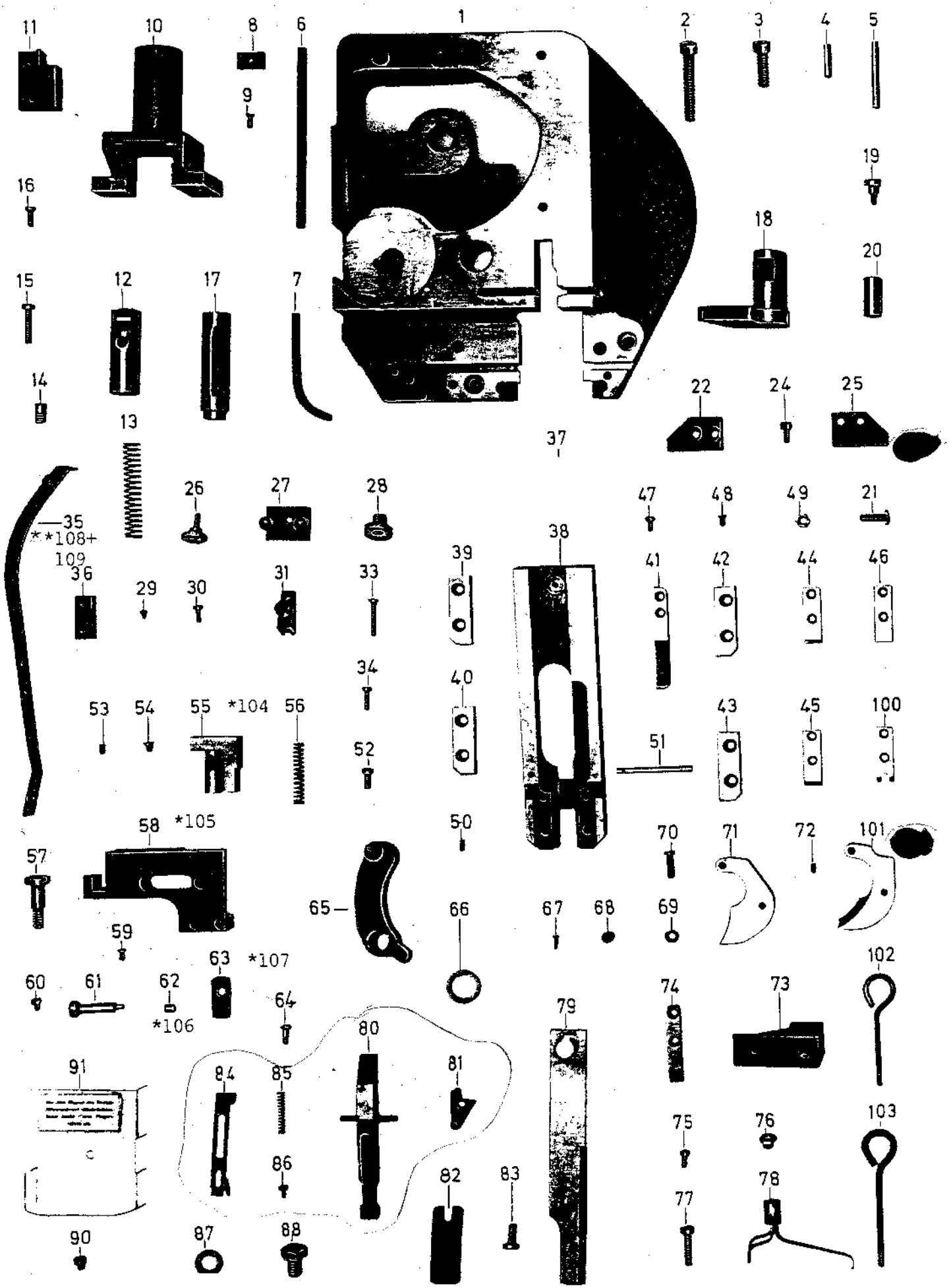

* ab Masch.Nr.4200
**ab Masch.Nr.4240

Nr.	Gegenstand	Zeichnungsnummer - DIN	Dimension
1	Heftkopfplatte	3310	
2	Zylinderschraube	DIN 912	M 8 x 50
3	Zylinderschraube	DIN 912	M 8 x 25
4	Zylinderstift	DIN 7	6 m 6 x 20
5	Zylinderstift	DIN 7	6 m 6 x 50
6	Rohrstück, gerade	3372	
7	Rohrstück, gebogen	3373	
8	Klemmplättchen	3374	
9	Senkschraube	DIN 63	M 4 x 10
10	Stößelführung	3321	
11	Kurve	3320	
12	Rollenstößel	3322	
13	Druckfeder	3423	
14	Anschlagschraube	3323	
15	Zylinderschraube	DIN 84	M 5 x 25
16	Zylinderschraube	DIN 84	M 4 x 12
17	Achsbolzen	3328	
18	Abschneiderklinke	3240	
19	Ansatzschraube	3264	
20	Abschneiderbolzen	3331	
21	Abschneiderschraube	3332	
22	Plättchen, links	3398	
24	Inbus - Schraube	DIN 912	M 5 x 12
25	Plättchen, rechts	3399	
26	Anstellschraube	3315	
27	Rollendrahtrichter	3311	
28	Rändelmutter	3430	
29	Zylinderschraube	DIN 84	M 3 x 5
30	Zylinderschraube	DIN 84	M 4 x 10
31	Anstellwinkel	3312	
33	Zylinderschraube	DIN 84	M 4 x 25
34	Zylinderschraube	DIN 84	M 4 x 12
35	Stahlband	3450	
36	Filztasche	3512	
37	Rolle	3231	
38	Hauptschieber	3319-940339	
39	Umbieger, links	3222	
40	Umbieger, links	3225	
41	Greiferkurve	3242	
42	Umbieger, rechts	3223	
43	Umbieger, rechts	3226	
44	Treiber ohne Lippe	3221 3103221	
45	Treiber mit Lippe	3224	
46	Treiber	3227	
47	Zylinderschraube	DIN 84	M 4 x 10
48	Senkschraube	DIN 63	M 4 x 8
49	Sechskantmutter	DIN 934	M 6
50	Gewindestift	DIN 553	M 4 x 10
51	Achse	3713	
52	Zylinderschraube	DIN 84	M 5 x 10
53	Gewindestift	DIN 551	M 5 x 8
54	Senkschraube	3366	
55	Abschneiderschieber	3790	
56	Druckfeder	3424	
57	Ansatzschraube	3309	
58	Abschneiderblock	3793	
59	Senkschraube	DIN 63	M 4 x 8
60	Zylinderschraube	DIN 84	M 4 x 6
61	Röhrendrahtrichter	3352	

Nr.	Gegenstand	Zeichnungsnummer - DIN	Dimension
62	Rundmesser	3388 - 3203388	
63	Flachmesser	3425 - 320 3425	
64	Ansatzschraube	3420	
65	Pleuelstange	3249	
66	Anlaufscheibe	3236	
67	Senkschraube	DIN 63	M 3 x 10
68	Gummirolle	3417	
69	Rolle	3325	
70	Bolzen	3326	
71	Schuhzunge	3241	
72	Gewindestift	DIN 914	M 4 x 12
73	Drahtführungsblock	3272	
74	Mittelschiebernase	3355	
75	Zylinderschraube	DIN 84	M 4 x 10
76	Schmiernippel		M 8 x 1
77	Zylinderschraube	DIN 84	M 6 x 25
78	Ölspinne	3800	
79	Mittelschieber	3341	
80	Former	3234	
81	Greiferhebel	3318 - 9403318	
82	Blattfedern	3487	
83	Zylinderschraube	DIN 84	M 6 x 15
84	Greifer	29 3235	
85	Druckfeder	3422	
86	Ansatzschraube	3421	
87	Unterlegscheibe	DIN 125	10,5
88	Sechskantschraube	3558	
90	Zylinderschraube	DIN 84	M 5 x 6
91	Schutzscheibe	3486	
100	Treiber	3718	
101	Schuhzunge	3715	
102	Ringschraube	3716	
103	Ringschraube	3717	

ab Maschine No. 4200:
from machine no. 4200 on:
de machine no. 4200:
despues de máquina no. 4200:

104	Abschneiderschieber	3790a
105	Abschneiderblock	3793a
106	Rundmesser	3388a
107	Flachmesser	3425a

ab Maschine No. 4240:
from machine no. 4200 on:
de machine no. 4200:
despues de máquina no. 4200:

108	Stahlband	3450a
109	Filzscheibe	51129

STELLGEHÄUSE UND DRAHTVORSCHUB

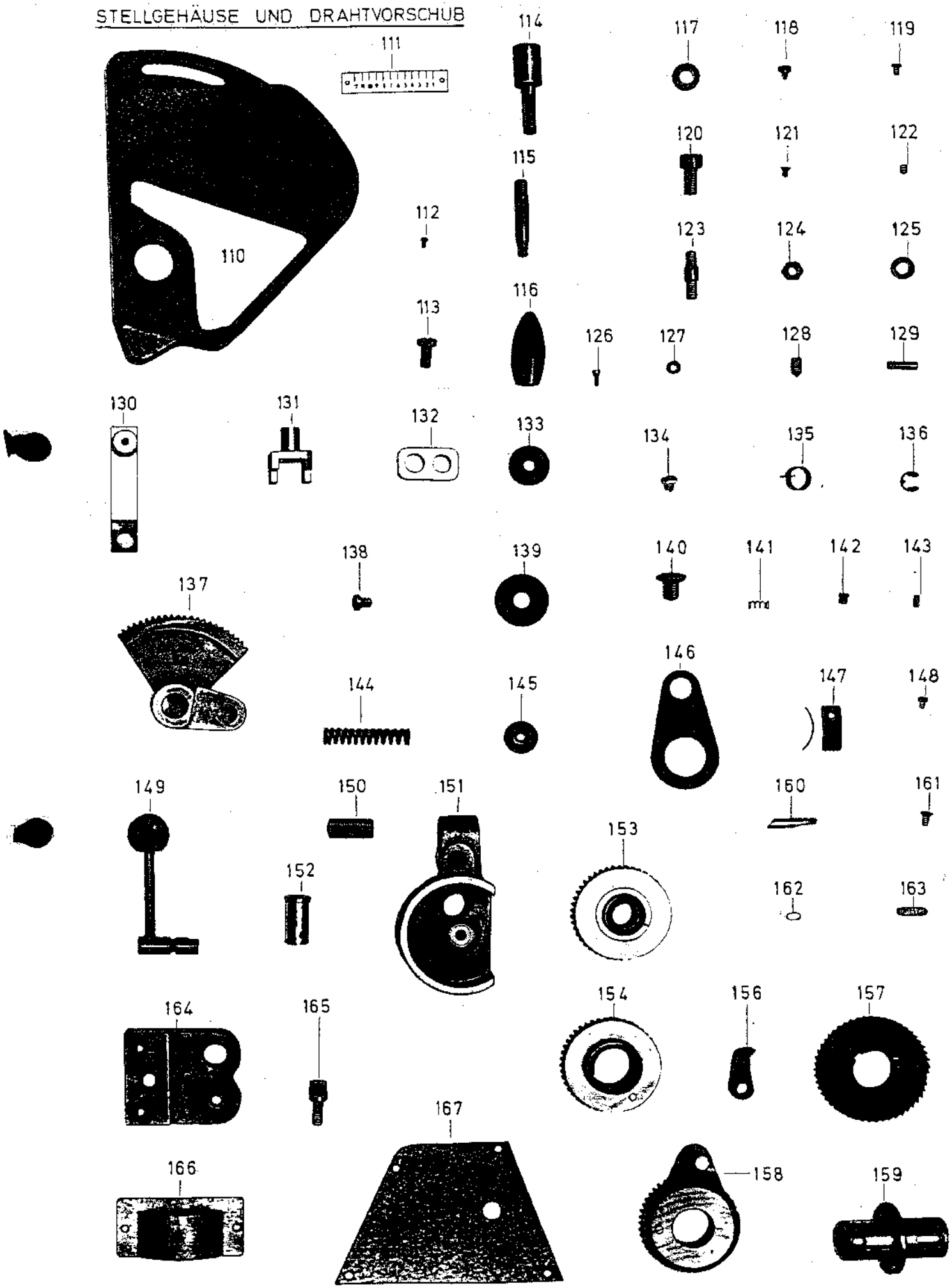

Nr.	Gegenstand	Zeichnungsnummer - DIN	Dimension
110	Stellgehäuse	3229	
111	Skalenschild	3726	
112	Linsenkopfschraube	DIN 85	M 3 x 6
113	Seckskantschraube	3774	
114	Knebelschraube	3400	
115	Gewindebolzen	3401	
116	Ballengriff		M 8
117	Unterlagscheibe	3265 (Dicke beachten)	
118	Zylinderschraube	3557	
119	Zylinderschraube	DIN 84	M 4 x 8
120	Inbus - Schraube	DIN 912	M 10 x 20
121	Senkschraube	DIN 63	M 4 x 8
122	Gewindestift	DIN 553	M 6 x 8
123	Handgriffbolzen	3336	
124	Sechskantmutter	DIN 934	M 8
125	Unterlegscheibe	DIN 125	8,4
126	Ansatzschraube	3712	
127	Rolle	3429	
128	Gewindestift	DIN 914	M 8 x 15
129	Zylinderstift	DIN 7	8 - h8 x 36
130	Gleithebel	3268	
131	Bronzegabel	3262	
132	Bronzelasche	3271	
133	Scheibe	3338	
134	Schmiernippel		M 8 x 1
135	Drehfeder	3428	
136	Seegersicherung	DIN 6799	8
137	Zahnsegment	3324	
138	Federbolzen	3335	
139	Scheibe	3261	
140	Sechskantschraube	3395	
141	Druckfeder	3267	
142	Fiberbolzen	3266	
143	Spannstift	DIN 1481	3,5 x 12
144	Druckfeder	3334	
145	Scheibe	3402	
146	Aushebeplatte	3248	
147	Blattfeder	3689	
148	Zylinderschraube	DIN 84	M 4 x 8
149	Exzenterhebel	3829	
150	Stellschraube	3333	
151	Gehäuse	3353	
152	Bolzen	3330	
153	Transportrad	3346	
154	Transportrad	3343	
156	Sperrklinke	3244	
157	Sperrad	3247	
158	Klinkennabe	3245	
159	Nabe	3342	
160	Bremsbolzen	3682	
161	Senkschraube	DIN 63	M 5 x 10
162	Paßfeder	3801	
163	Paßfeder	3578	
164	Träger	3347	
165	Abhebebolzen	3339	
166	Abdeckblech	3393	
167	Abdeckblech	3257	

HEFTTISCH

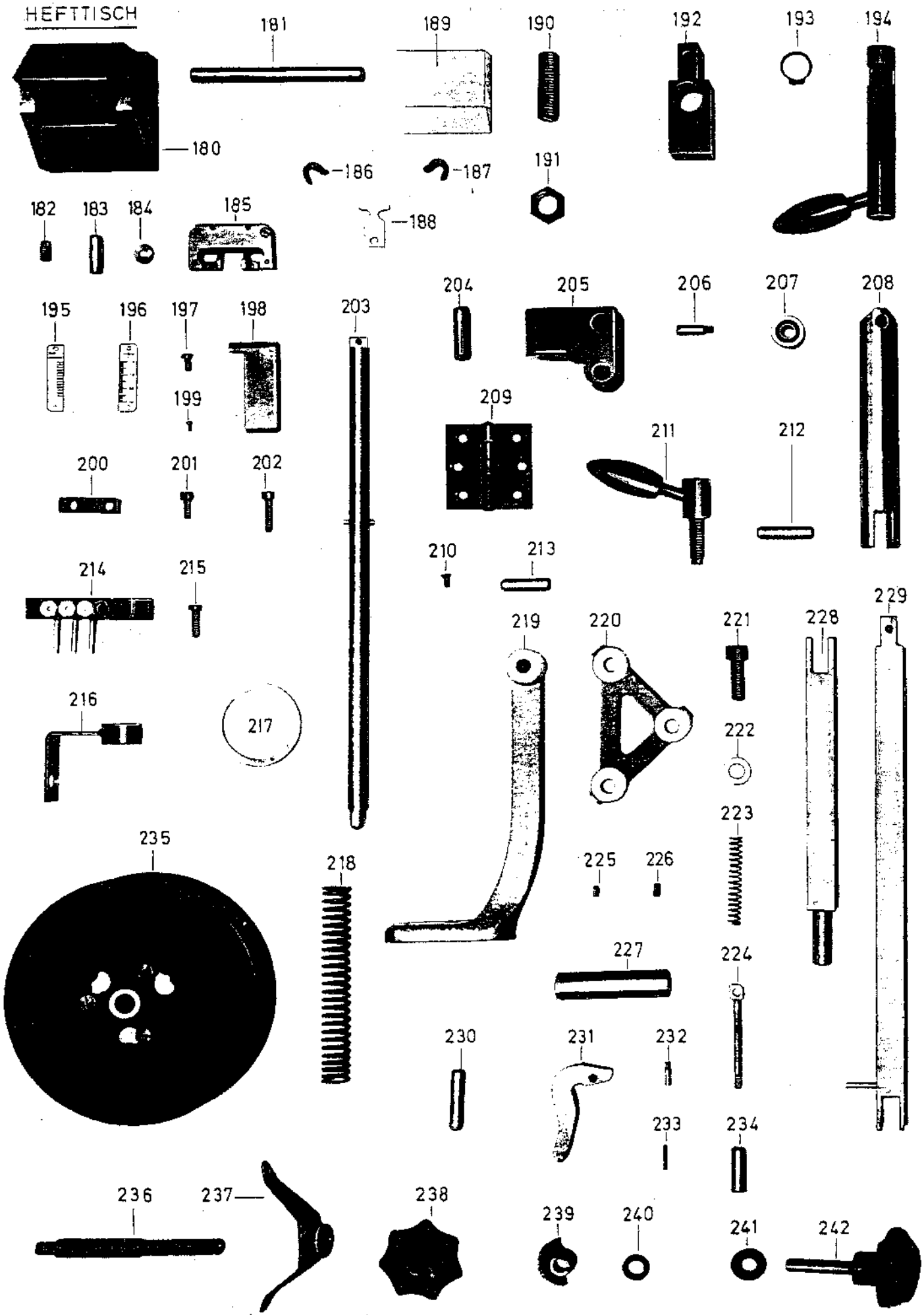
180
181
182
183
184
185
186
187
188
189
190
191
192
193
194
195
196
197
198
199
200
201
202
203
204
205
206
207
208
209
210
211
212
213
214
215
216
217
218
219
220
221
222
223
224
225
226
227
228
229
230
231
232
233
234
235
236
237
238
239
240
241
242

Nr.	Gegenstand	Zeichnungsnummer - DIN	Dimension
180	Block	3653	
181	Achse	3214	
182	Gewindestift	DIN 913	M 8 x 15
183	Zylinderstift	3435	
184	Abstimmscheibe	3812 (Dicke beachten)	
185	Klinscherkasten	3656	
186	Klinscher, links	3655	
187	Klinscher, rechts	3655	
188	Klinscherstößel	3412	
189	Einlegeblock	3658	
190	Justierschraube	3406	
191	Seckskantmutter	DIN 936	M 16 x 1,5
192	Stangenkopf	3298	
193	Seegerring	DIN 471	A 20 x 1,2
194	Umschlagbolzen	3477	
195	Skala, "Drahteinstellung"	3255	
196	Skala "Heftdicke"	3256	
197	Zylinderschraube	DIN 84	M 5 x 10
198	Paßfeder	3293	
199	Linsenkopfschraube	DIN 85	M 3 x 6
200	Meßblock	3307	
201	Inbus - Schraube	DIN 912	M 6 x 15
202	Inbus - Schraube	DIN 912	M 6 x 25
203	Stößelstange	3207	
204	Zylinderstift	DIN 6325	12 m 6 x 40
205	Winkelhebel	3203	
206	Rollenbolzen	3282	
207	Stützrolle	JNA	NA 22/8 - PP
208	Rollenstößel	3807	
209	Scharnier	Stanley	2 1/2" x 2 1/2"
210	Senkschraube	DIN 63	M 5 x 10
211	Knebelschraube	3553/54	
212	Zylinderstift	DIN 6325	10 m 6 x 28
213	Zylinderstift	DIN 6325	10 m 6 x 45
214	Schmierblock	3481	
215	Zylinderschraube	DIN 84	M 6 x 20
216	Kabelhalter	3710	
217	Abstimmring	3215	
218	Klinscherfeder	3408	
219	Drahtrollenträger	3302	
220	Winkelhebel	3805	
221	Inbus - Schraube	DIN 912	M 10 x 30
222	Unterlegscheibe	DIN 125	10,5
223	Druckfeder	3217	
224	Rastbolzen	3216	
225	Gewindestift	DIN 913	M 6 x 10
226	Gewindestift	DIN 913	M 8 x 15
227	Büchse	3218	
228	Druckstange	3809	
229	Druckstange	3308	
230	Zylinderstift	DIN 6325	10 m 6 x 20
231	Walzenabstellhebel	3416	
232	Schaftschraube	3810	
233	Spannstift	DIN 1481	3 x 18
234	Zylinderstift	3243	
235	Drahtspule	03798	
236	Bolzen	3413	
237	Blattfeder	3651	
238	Sterngriff	3431	
239	Türriegel	Loewe	Größe 0
240	Abstimmscheibe	3812 (Dicke beachten)	
241	Zwischenring	3213	
242	Handgriff	3213	

KUPPLUNGSWELLE

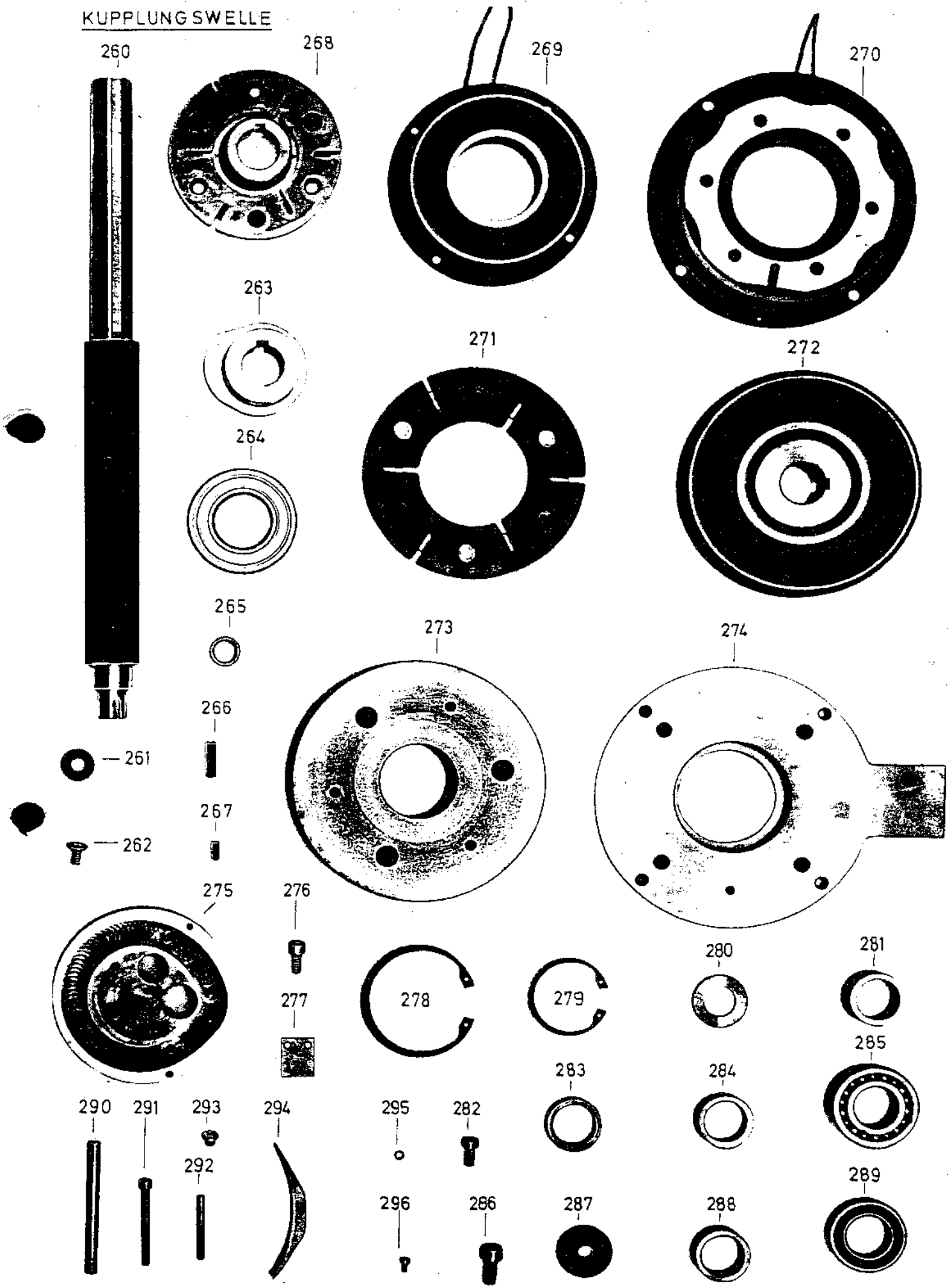

Nr.	Gegenstand	Zeichnungsnummer - DIN	Dimension
260	Kupplungswelle	3817	
261	Senkscheibe	3197	
262	Senkschraube	DIN 7991	M 8 x 15
263	Nockenscheibe	3825	
264	Rillenkugellager	SKF - 6208 - 2 Z	
265	Buchse	3303	
266	Paßfeder	3579	
267	Paßfeder	3752	
268	Anker für Bremse		
269	Magnet - Bremse		
270	Magnet - Scheibe	3828	
271	Anker für Kupplung		
272	Kupplung - Rotor	3818	
273	Keilriemenscheibe	3816	
274	Stößelflansch	3815	
275	Kurvenscheibe	3181	
276	Inbus - Schraube	DIN 912	M 8 x 20
277	Unterlage	3757	
278	Seegerring	DIN 472	J 80 x 2,5
279	Seegerring	DIN 472	J 55 x 2
280	Distanzscheibe	3824	
281	Lagerring	3823	
282	Inbus - Schraube	DIN 6912	M 8 x 15
283	Distanzring	3821	
284	Distanzring	3822	
285	Rillenkugellager	SKF - 4206	
286	Inbus - Schraube	DIN 912	M 10 x 20
287	Scheibe	3169	
288	Distanzring	3820	
289	Rillenkugellager	SKF - 6006 - RS	
290	Schmierrohr	3509	
291	Inbus - Schraube	DIN 912	M 6 x 60
292	Zylinderstift	DIN 7	6m6 x 50
293	Schmiernippel		M 8 x 1
294	Schaltnocken	3819	
295	Federring	DIN 127	A 4
296	Zylinderschraube	DIN 84	M 4 x 8

MOTORANTRIEB

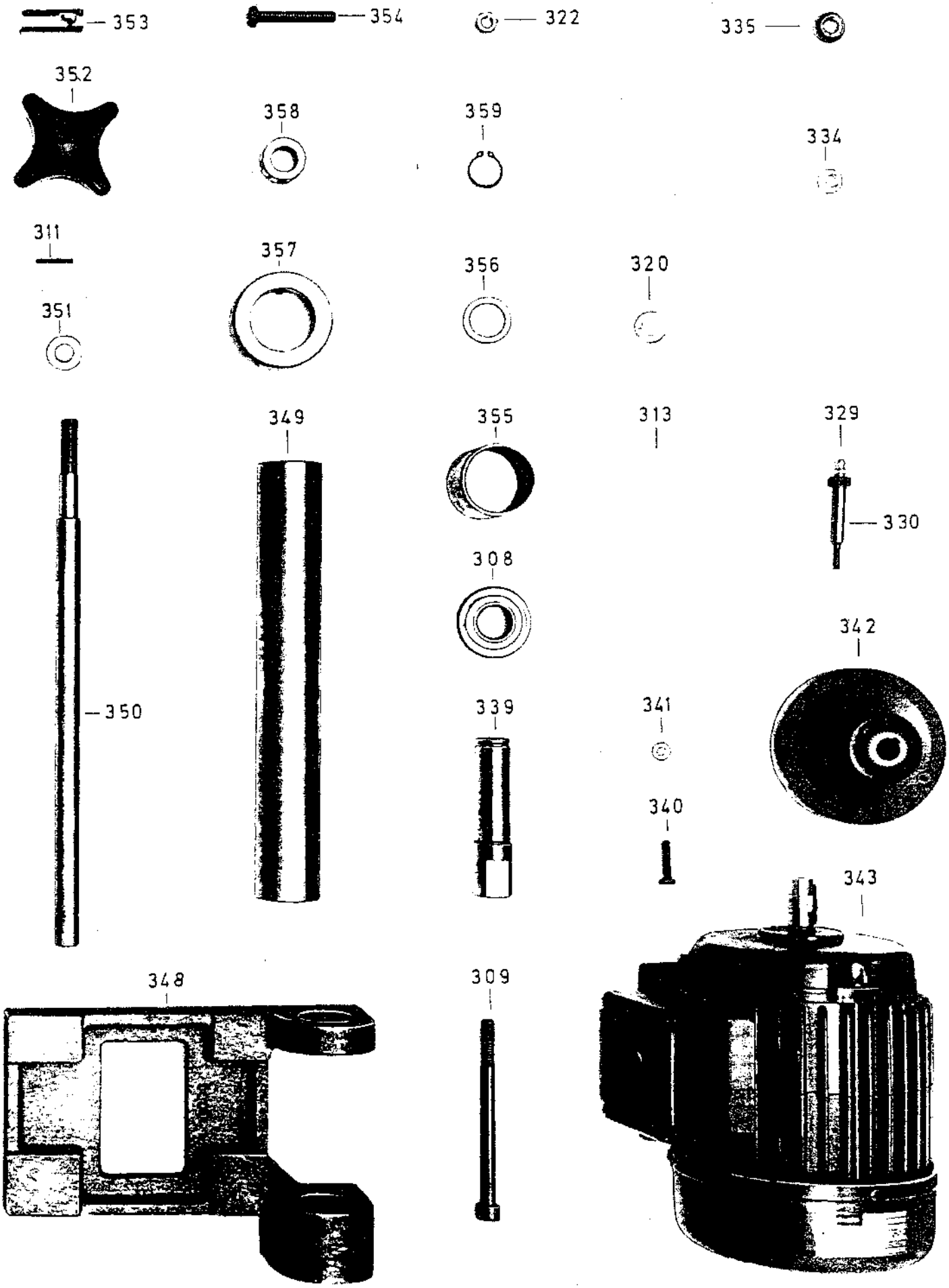

Nr.	Gegenstand	Zeichnungsnummer - DIN	Dimension
308	Rillenkugellager	SKF - 6204-Z	
309	Inbus-Schraube	DIN 912	M 12 x 120
311	Spannstift	DIN 1481	3 x 24
313	Inbus-Schraube	DIN 912	M 10 x 30
320	Unterlegscheibe	DIN 125	10,5
322	Sechskantmutter	DIN 934	M 6
329	Kugelschmierkopf	DIN 3402	A - M 6
330	Sechskantschraube	3567	
334	Dichtring		M 8
335	Zentrierscheibe	3568	
339	Achsbolzen	3306	
340	Sechskantschraube	DIN 931	M 6 x 20
341	Unterlegscheibe	DIN 125	6,4
342	Spreitzscheibe	SEF - 100	
343	Drehstrom-Motor		0,25 kW
348	Motorwippe	3840	
349	Achse	3841	
350	Klemmspindel	3842	
351	Laufscheibe	INA	LS 1226
352	Kreuzgriff		C 80 x 16 - H7
353	Anschlagbolzen	3849	
354	Sechskantschraube	DIN 931	M8 x 100
355	Distanzhülse	3836	
356	Distanzscheibe	3835	
357	Stellring	DIN 705	A 40
358	Stellring	DIN 705	A 16
359	Seegerring	DIN 471	A 20 x 12

ELEKTRISCHE AUSRÜSTUNG

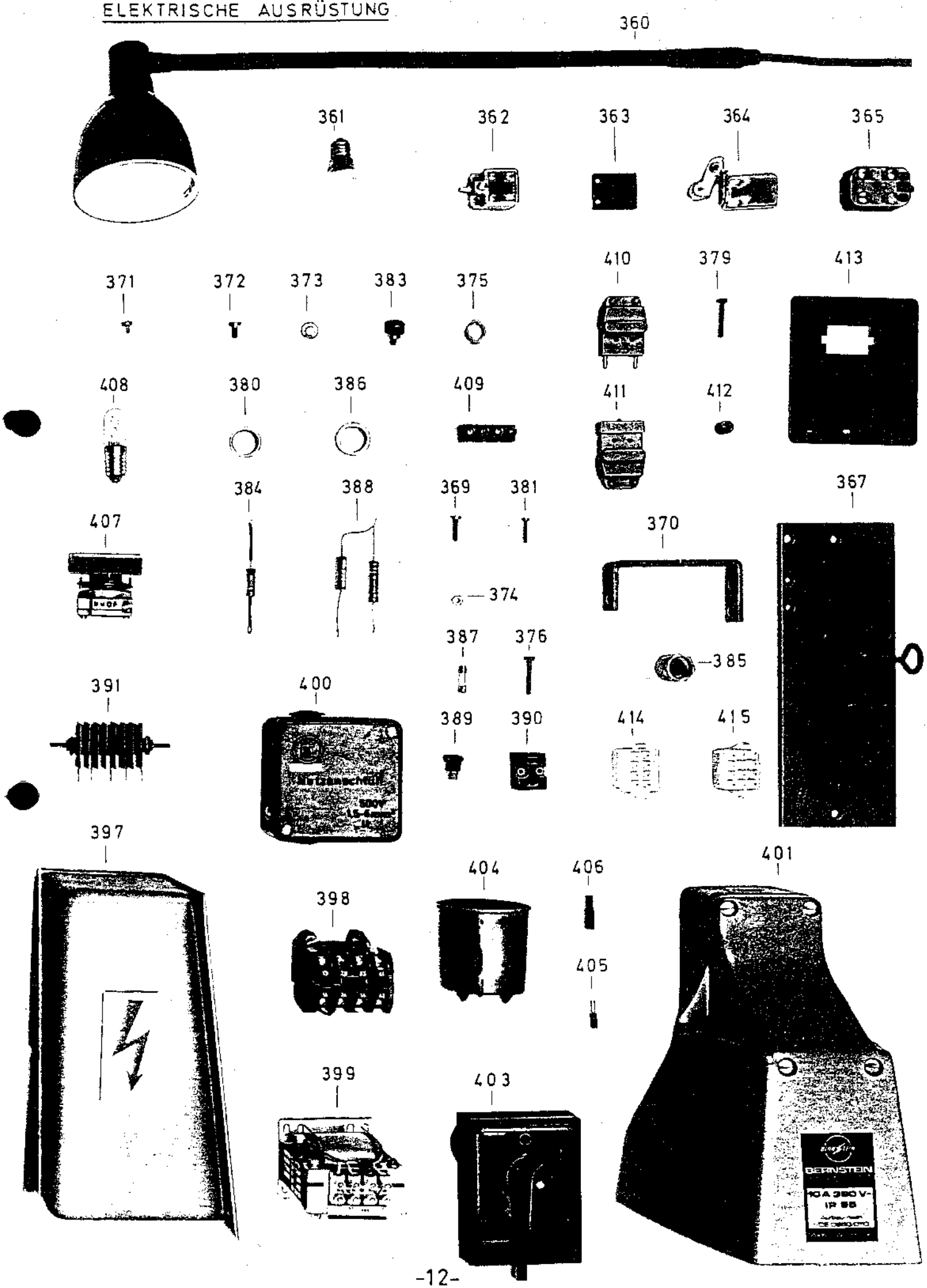

Nr.	Gegenstand	Zeichnungsnummer - DIN	Dimension
360	Arbeitsplatzleuchte		
361	Glühbirne		220 V/25 W/ E 14
362	Endschalter		
363	Unterlage		
364	Rolleneinrichtung		
365	Endschalter für Fußtaster		
367	Platte	3692	
369	Zylinderschraube	DIN 84	M 6 x 15
370	Bügel	3500	
371	Zylinderschraube	DIN 84	M 3 x 8
372	Zylinderschraube	DIN 84	M 6 x 10
373	Unterlegscheibe	DIN 125	6,3
374	Sechskantmutter	DIN 934	M 4
375	Schlauchklemme		
376	Zylinderschraube	DIN 84	M 3 x 18
379	Zylinderschraube	DIN 84	M 4 x 25
380	Reduzierring		PG 11/13,5
381	Zylinderschraube	DIN 84	M 4 x 15
383	Rändelschraube	3826	
384	Widerstand		100 Ohm
385	Kabelverschraubung		PG 11
386	Reduzierring		PG 11/16
387	Feinsicherung	2 Ampére - mittelträge	5 x 20
388	Funkenlöschglied		
389	Schraubkappe		
390	Sicherungskasten		
391	Gleichrichter		
397	Abdeckhaube	3357	
398	Luftschütz	V und Hz bitte angeben	
399	Transformator	V bitte angeben	
400	Netzanschlußkasten		
401	Fußtaster		
403	Hauptschalter		
404	Abdeckhaube für Hauptschalter		
405	Stocko - Stecker		
406	Stocko - Buchse		
407	Kontrollampe		
408	Glühbirne		24 V/ 2 W
409	Erdungsklemme		
410	2-pol. Stecker		
411	2-pol. Buchse		
412	Distanzbuchse	3851	
413	Halteblech	3847	
414	AMP - Stiftgehäuse		
415	AMP - Siftbuchse		

DIVERSE GROSSTEILE

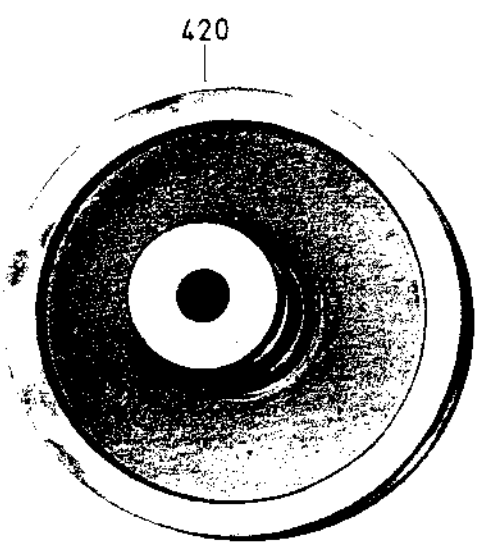

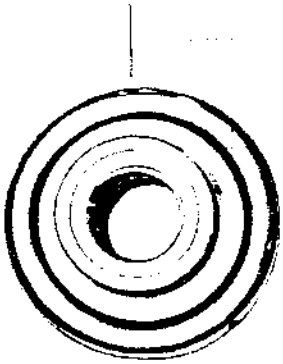

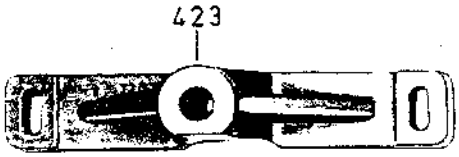

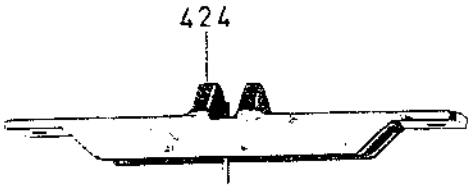

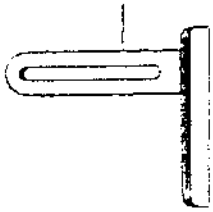

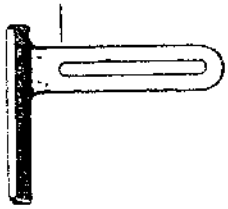

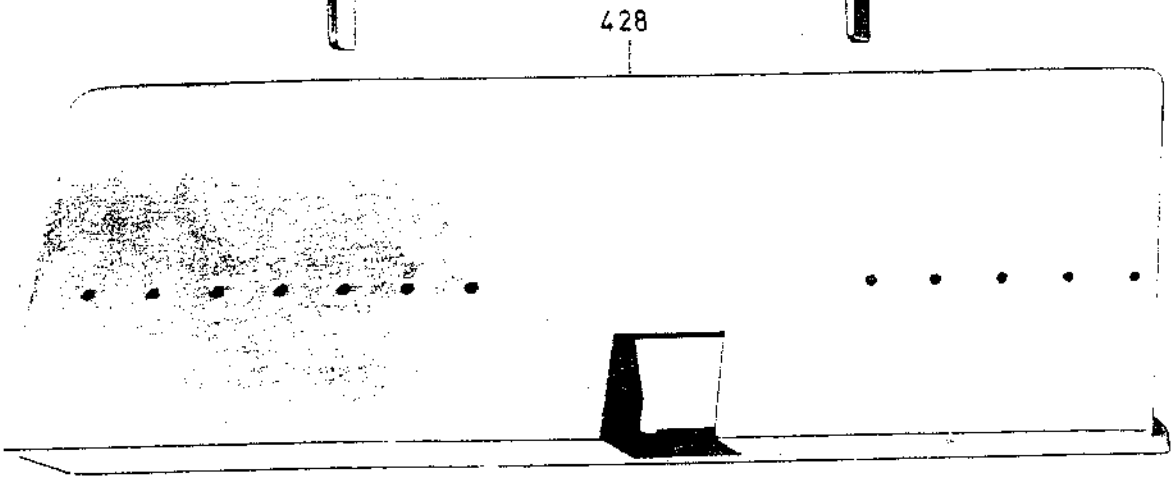

Nr.	Gegenstand	Zeichnungsnummer - DIN	Dimension
420	Keilriemenscheibe	3516	
421	Handrad	3190	
422	Tischspindel	3200	
423	Träger	3189	
424	Träger	3806	
425	Anschlagwinkel, links	3678	
426	Rändelschraube	3669	
427	Anschlagwinkel, rechts	3679	
428	Tisch	3654	
429	Heftlineal	3670	